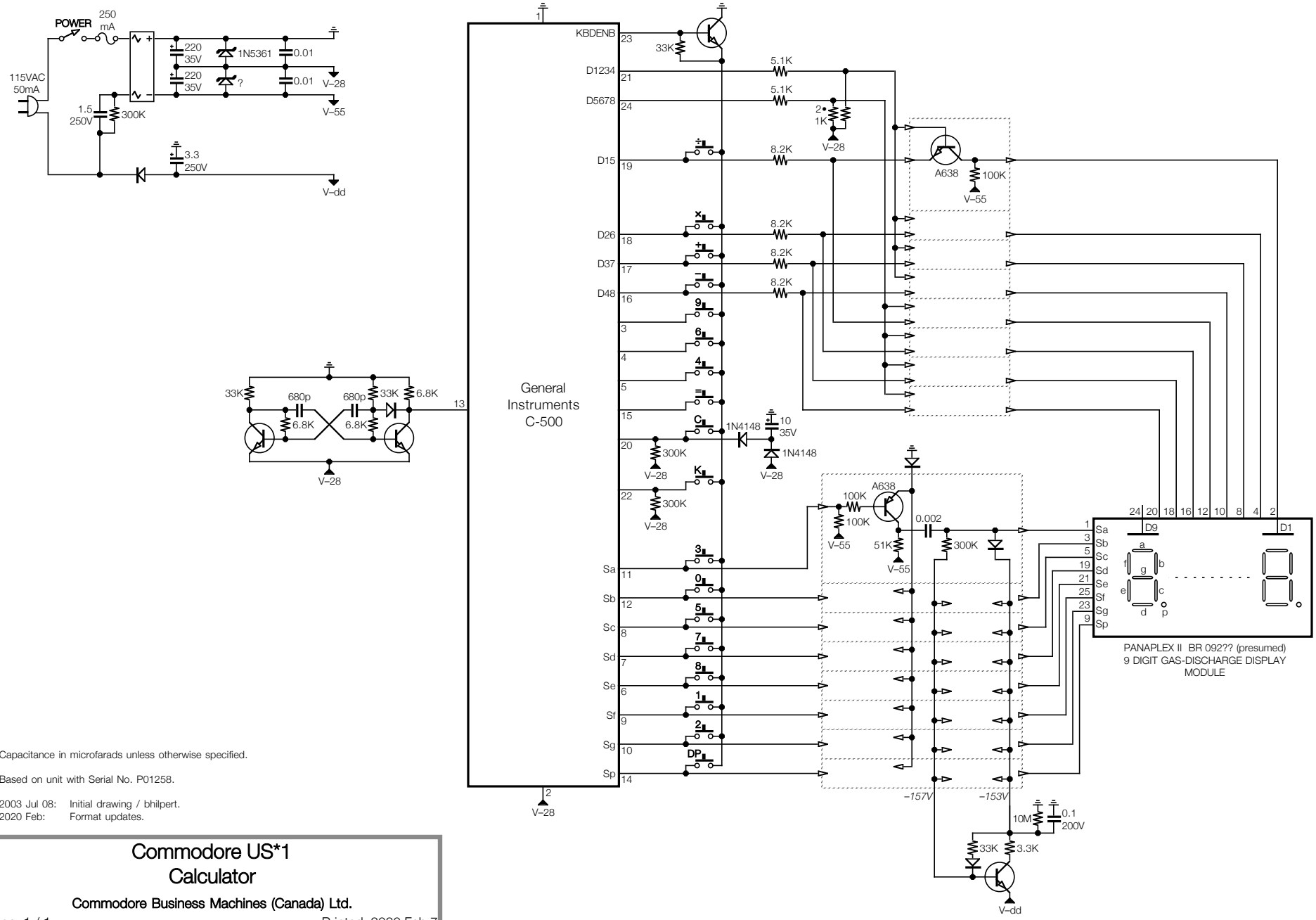

- Capacitance in microfarads unless otherwise specified.
- Based on unit with Serial No. P01258.
- 2003 Jul 08: Initial drawing / bhilpert.
  2020 Feb: Format updates.

Commodore US*1 Calculator

Commodore Business Machines (Canada) Ltd.

Page: 1 / 1 Printed: 2020 Feb 7